CL250-3
CL250-4

Main material and finish: White zinc plated steel hinge and pin
Application: Opening angle 120°

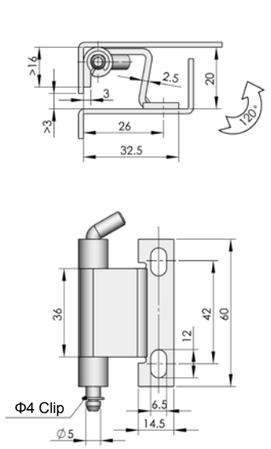

CL250-3

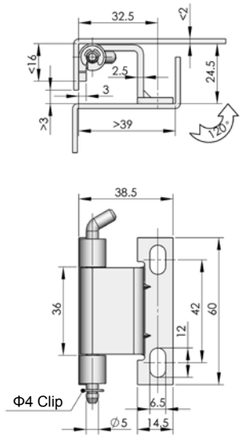

CL250-4

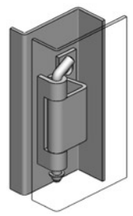

ERP	
CL250–3	CL250–4
CL250F3D001	CL250F3D002

CL251

Main material and finish: Sand-spraying and bright chrome-plated ZDC hinge, stainless steel pin and cover
Application: Opening angle 180°

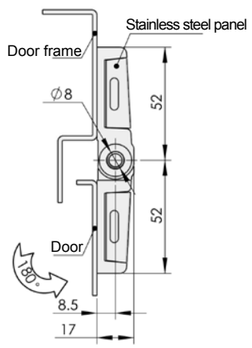

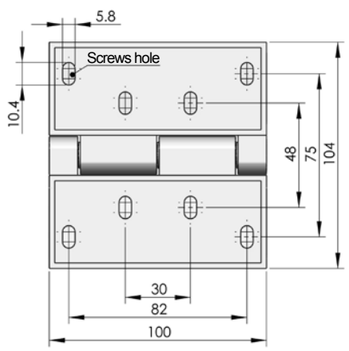

ERP	CL251Z3H001

SHENGJIU CABINETS LOCK
www.shengjiu.com

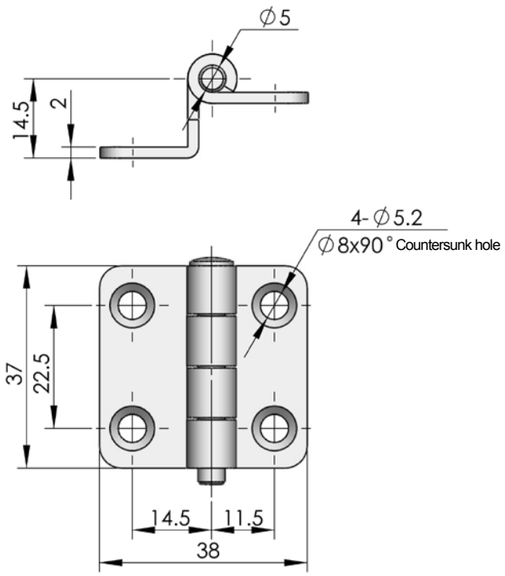

ERP	CL252S00001

CL252

INOX AISI 3..

Main material and finish: Stainless steel hinge
Application: Opening angle 180°

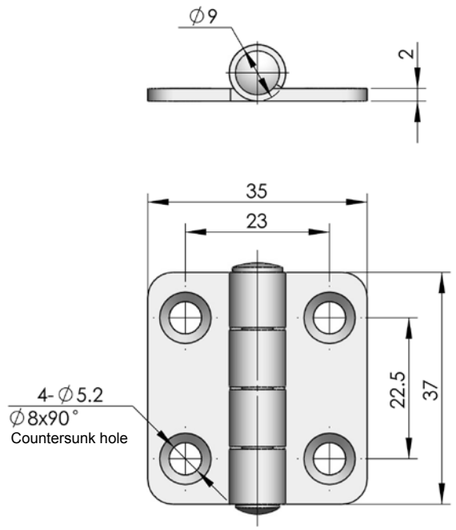

ERP	CL253S4A001

CL253-1

INOX AISI 3..

Main material and finish: Mirror polishing stainless steel hinge
Application: Opening angle 180°

Accessories
Handle lock
Cylinder lock
Electronic lock
Plane lock
Rod control lock
Panel lock
Toggle and hook
Handles
Door stop
Hinge
Seal gasket